YK-D02AF

単位：mm

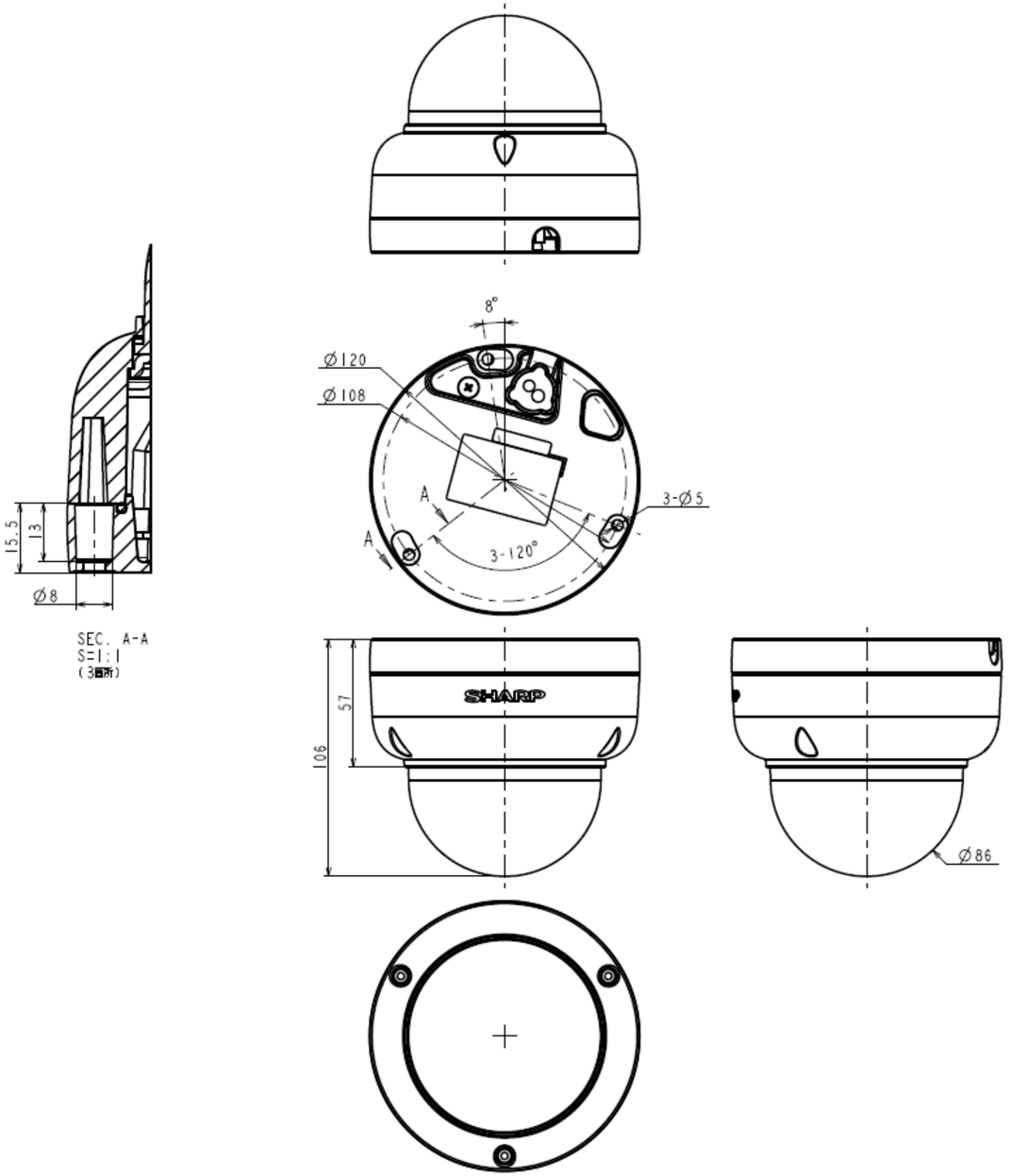

Copyright © All rights reserved, SHARP CORPORATION