YC-MC01

単位：mm

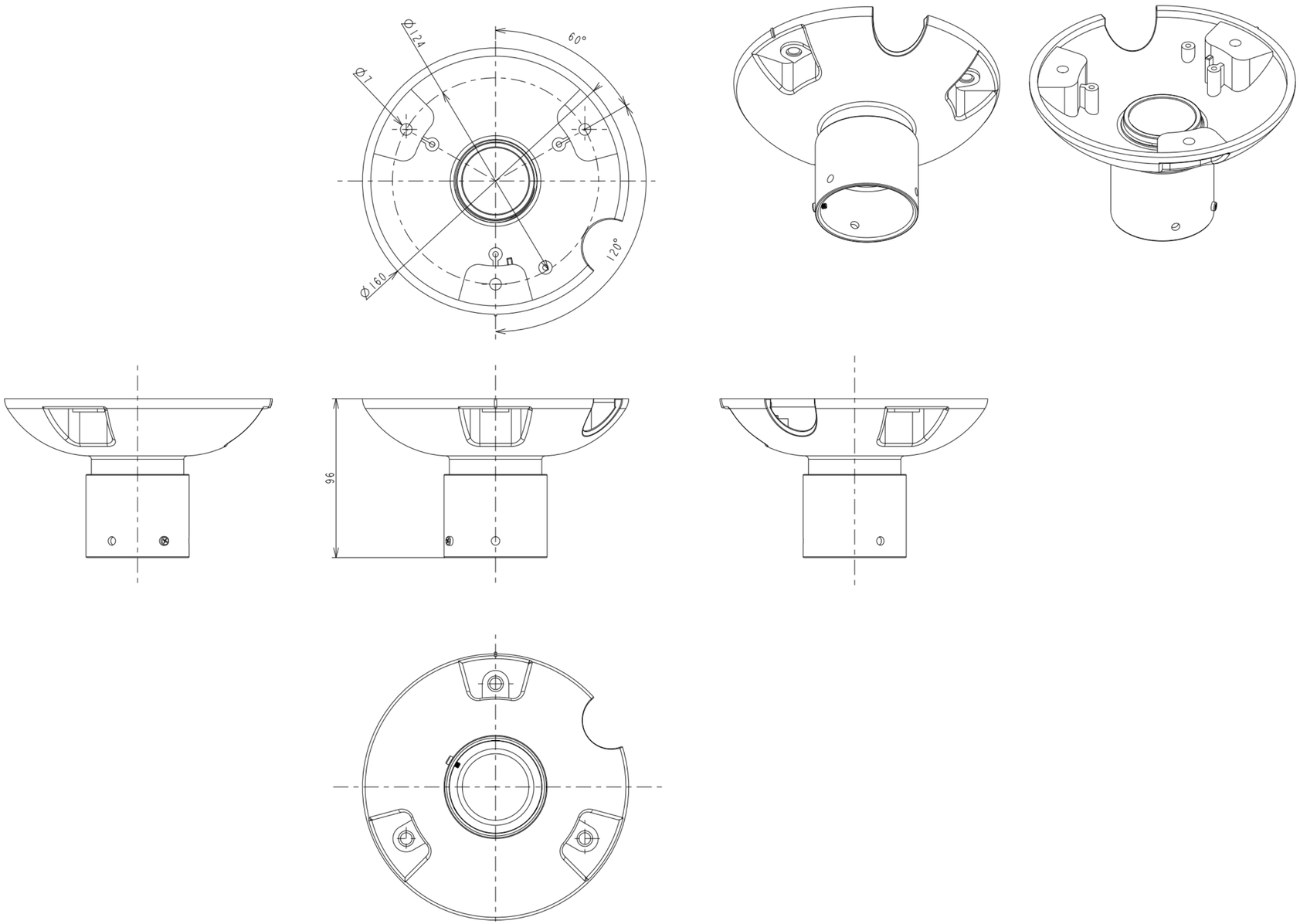

Copyright © All rights reserved, SHARP CORPORATION